STEVENSVILLE AIRPORT

Branch: 05A **APRON** **A-1**

Length: 0 LF **Width:** 0 LF **Area:** 70,000 SF **Last Const. :** 1991 **Family:** 9STPA
From: ENTIRE APRON **To:** **Surface:** ST

Inspections

Samples Surveyed: 5 **Total Samples:** 15 **Last Inspection Date:** 10/30/2009 **PCI: 70**

Sample # 2 **Area:** 4800 SF

Distress Description	Severity	Quantity
WEATHERING/RAVELING	L	720 SF
LONGITUDINAL/TRANSVERSE CRACKING	L	22 LF
BLEEDING	N	43 SF
PATCHING	L	7 SF

Sample # 5 **Area:** 4800 SF

Distress Description	Severity	Quantity
WEATHERING/RAVELING	L	522 SF
LONGITUDINAL/TRANSVERSE CRACKING	L	8 LF
OIL SPILLAGE	N	12 SF
PATCHING	H	6 SF
DEPRESSION	H	5 SF
PATCHING	H	2 SF

Sample # 7 **Area:** 4800 SF

Distress Description	Severity	Quantity
WEATHERING/RAVELING	L	474 SF
LONGITUDINAL/TRANSVERSE CRACKING	L	21 LF
DEPRESSION	H	14 SF
PATCHING	H	13 SF
OIL SPILLAGE	N	3 SF

Sample # 8 **Area:** 4800 SF

Distress Description	Severity	Quantity
WEATHERING/RAVELING	L	336 SF
BLEEDING	N	93 SF
DEPRESSION	H	8 SF
OIL SPILLAGE	N	8 SF
PATCHING	H	7 SF
PATCHING	L	2 SF

Sample # 13 **Area:** 4800 SF

Distress Description	Severity	Quantity
WEATHERING/RAVELING	L	690 SF
LONGITUDINAL/TRANSVERSE CRACKING	M	53 LF
LONGITUDINAL/TRANSVERSE CRACKING	L	29 LF
LONGITUDINAL/TRANSVERSE CRACKING	H	1 LF

Extrapolated Distress Quantities*

Distress Description	Severity	Quantity	Density	Deduct
PATCHING	H	82 SF	0.12 %	15.62
DEPRESSION	H	79 SF	0.11 %	12.50
WEATHERING/RAVELING	L	7998 SF	11.43 %	10.50
LONGITUDINAL/TRANSVERSE CRACKING	H	3 LF	0.00 %	7.50
LONGITUDINAL/TRANSVERSE CRACKING	M	155 LF	0.22 %	5.46
LONGITUDINAL/TRANSVERSE CRACKING	L	233 LF	0.33 %	3.71
BLEEDING	N	397 SF	0.57 %	3.41
OIL SPILLAGE	N	67 SF	0.10 %	2.00
PATCHING	L	26 SF	0.04 %	2.00

* Multiple deduct values are scaled down from their algebraic sum to keep the model consistent with experimental data.

Percent of Deduct Values Based on Distress Mechanism

0.0 **% Load** 71.0 **% Climate/Durability** 29.0 **% Other**

STEVENSVILLE AIRPORT

Branch: 05A **APRON** **A-2**

Length: 360 LF **Width:** 240 LF **Area:** 90,425 SF **Last Const. :** 1994 **Family:** 9ACAM
From: NORTH APRON **To:** **Surface:** AC

Inspections

Samples Surveyed: 5 **Total Samples:** 19 **Last Inspection Date:** 10/30/2009 **PCI: 64**

Sample # 1 **Area:** 4800 SF

Distress Description	Severity	Quantity
LONGITUDINAL/TRANSVERSE CRACKING	L	125 LF
LONGITUDINAL/TRANSVERSE CRACKING	M	85 LF
WEATHERING/RAVELING	L	150 SF
LONGITUDINAL/TRANSVERSE CRACKING	H	30 LF
WEATHERING/RAVELING	M	10 SF

Sample # 5 **Area:** 4800 SF

Distress Description	Severity	Quantity
LONGITUDINAL/TRANSVERSE CRACKING	L	138 LF
WEATHERING/RAVELING	L	150 SF
LONGITUDINAL/TRANSVERSE CRACKING	M	33 LF
DEPRESSION	L	20 SF
DEPRESSION	M	10 SF

Sample # 9 **Area:** 4800 SF

Distress Description	Severity	Quantity
LONGITUDINAL/TRANSVERSE CRACKING	H	140 LF
WEATHERING/RAVELING	L	94 SF
LONGITUDINAL/TRANSVERSE CRACKING	M	10 LF
LONGITUDINAL/TRANSVERSE CRACKING	L	7 LF
PATCHING	H	5 SF

Sample # 12 **Area:** 4800 SF

Distress Description	Severity	Quantity
LONGITUDINAL/TRANSVERSE CRACKING	M	110 LF
LONGITUDINAL/TRANSVERSE CRACKING	L	64 LF
WEATHERING/RAVELING	L	150 SF
LONGITUDINAL/TRANSVERSE CRACKING	H	40 LF

Sample # 15 **Area:** 4800 SF

Distress Description	Severity	Quantity
LONGITUDINAL/TRANSVERSE CRACKING	M	31 LF
WEATHERING/RAVELING	L	93 SF
LONGITUDINAL/TRANSVERSE CRACKING	L	28 LF
LONGITUDINAL/TRANSVERSE CRACKING	H	17 LF
PATCHING	H	5 SF

Extrapolated Distress Quantities*

Distress Description	Severity	Quantity	Density	Deduct
LONGITUDINAL/TRANSVERSE CRACKING	H	855 LF	0.95 %	19.10
PATCHING	H	38 SF	0.04 %	15.50
LONGITUDINAL/TRANSVERSE CRACKING	M	1014 LF	1.12 %	11.84
LONGITUDINAL/TRANSVERSE CRACKING	L	1364 LF	1.51 %	6.13
DEPRESSION	M	38 SF	0.04 %	5.20
WEATHERING/RAVELING	L	2400 SF	2.65 %	4.72
WEATHERING/RAVELING	M	38 SF	0.04 %	4.00
DEPRESSION	L	75 SF	0.08 %	0.30

* Multiple deduct values are scaled down from their algebraic sum to keep the model consistent with experimental data.

Percent of Deduct Values Based on Distress Mechanism

0.0 **% Load** 92.0 **% Climate/Durability** 8.0 **% Other**

STEVENSVILLE AIRPORT

Branch: 05R **RUNWAY** **R-1**

Length: 3,800 LF **Width:** 60 LF **Area:** 228,000 SF **Last Const. :** 1991 **Family:** 9STPA
From: STA 0+00 **To:** STA 38+00 **Surface:** ST

Inspections

Samples Surveyed: 7 **Total Samples:** 48 **Last Inspection Date:** 10/30/2009 **PCI: 67**

Sample # 1 **Area:** 4800 SF

Distress Description	Severity	Quantity
WEATHERING/RAVELING	L	720 SF
BLEEDING	N	280 SF
LONGITUDINAL/TRANSVERSE CRACKING	L	25 LF

Sample # 8 **Area:** 4800 SF

Distress Description	Severity	Quantity
WEATHERING/RAVELING	L	720 SF
BLEEDING	N	303 SF

Sample # 15 **Area:** 4800 SF

Distress Description	Severity	Quantity
WEATHERING/RAVELING	L	720 SF
LONGITUDINAL/TRANSVERSE CRACKING	L	103 LF
BLEEDING	N	322 SF
DEPRESSION	L	9 SF

Sample # 22 **Area:** 4800 SF

Distress Description	Severity	Quantity
WEATHERING/RAVELING	L	720 SF
BLEEDING	N	277 SF
DEPRESSION	H	10 SF

Sample # 29 **Area:** 4800 SF

Distress Description	Severity	Quantity
WEATHERING/RAVELING	L	720 SF
BLEEDING	N	189 SF

Sample # 36 **Area:** 4800 SF

Distress Description	Severity	Quantity
WEATHERING/RAVELING	L	720 SF
BLEEDING	N	194 SF

Sample # 43 **Area:** 4800 SF

Distress Description	Severity	Quantity
WEATHERING/RAVELING	L	720 SF
BLEEDING	N	261 SF
WEATHERING/RAVELING	M	1 SF

Extrapolated Distress Quantities*

Distress Description	Severity	Quantity	Density	Deduct
BLEEDING	N	12401 SF	5.44 %	25.92
DEPRESSION	H	68 SF	0.03 %	12.00
WEATHERING/RAVELING	L	34200 SF	15.00 %	11.99
WEATHERING/RAVELING	M	7 SF	0.00 %	4.00
LONGITUDINAL/TRANSVERSE CRACKING	L	869 LF	0.38 %	3.83
DEPRESSION	L	61 SF	0.03 %	0.30

* Multiple deduct values are scaled down from their algebraic sum to keep the model consistent with experimental data.

Percent of Deduct Values Based on Distress Mechanism

0.0 **% Load** 34.0 **% Climate/Durability** 66.0 **% Other**

STEVENSVILLE AIRPORT

Branch: 05T **TAXIWAY** **T-1**

Length: 835 LF **Width:** 35 LF **Area:** 29,225 SF **Last Const. :** 1991 **Family:** 9STPA

From: Runway **To:** Apron, Turnarounds **Surface:** ST

Inspections

Samples Surveyed: 3 **Total Samples:** 5 **Last Inspection Date:** 10/30/2009 **PCI: 67**

Sample # 2 **Area:** 4800 SF

Distress Description	Severity	Quantity
WEATHERING/RAVELING	L	240 SF
WEATHERING/RAVELING	M	35 SF
LONGITUDINAL/TRANSVERSE CRACKING	L	10 LF
LONGITUDINAL/TRANSVERSE CRACKING	M	6 LF
LONGITUDINAL/TRANSVERSE CRACKING	H	3 LF
WEATHERING/RAVELING	H	1 SF

Sample # 3 **Area:** 5400 SF

Distress Description	Severity	Quantity
WEATHERING/RAVELING	L	810 SF
DEPRESSION	L	290 SF
LONGITUDINAL/TRANSVERSE CRACKING	L	76 LF
BLEEDING	N	173 SF
ALLIGATOR CRACKING	L	21 SF

Sample # 4 **Area:** 6300 SF

Distress Description	Severity	Quantity
WEATHERING/RAVELING	L	315 SF
LONGITUDINAL/TRANSVERSE CRACKING	L	68 LF
LONGITUDINAL/TRANSVERSE CRACKING	M	40 LF
BLEEDING	N	86 SF
WEATHERING/RAVELING	H	1 SF

Extrapolated Distress Quantities*

Distress Description	Severity	Quantity	Density	Deduct
DEPRESSION	L	514 SF	1.76 %	10.30
WEATHERING/RAVELING	L	2418 SF	8.27 %	8.92
BLEEDING	N	459 SF	1.57 %	8.43
LONGITUDINAL/TRANSVERSE CRACKING	H	5 LF	0.02 %	7.50
ALLIGATOR CRACKING	L	37 SF	0.13 %	7.19
LONGITUDINAL/TRANSVERSE CRACKING	M	81 LF	0.28 %	6.23
WEATHERING/RAVELING	H	4 SF	0.01 %	6.00
LONGITUDINAL/TRANSVERSE CRACKING	L	273 LF	0.93 %	4.81
WEATHERING/RAVELING	M	62 SF	0.21 %	4.73

* Multiple deduct values are scaled down from their algebraic sum to keep the model consistent with experimental data.

Percent of Deduct Values Based on Distress Mechanism

11.0 **% Load** 60.0 **% Climate/Durability** 29.0 **% Other**

STEVENSVILLE AIRPORT

Branch: 05T **TAXIWAY** **T-3**

Length: 2,080 LF **Width:** 35 LF **Area:** 161,448 SF **Last Const. :** 1994 **Family:** 9ACRMU
From: T-1 **To:** A-1 **Surface:** AC

Inspections

Samples Surveyed: 5 **Total Samples:** 28 **Last Inspection Date:** 10/30/2009 **PCI: 78**

Sample # 4 **Area:** 4935 SF

Distress Description	Severity	Quantity
WEATHERING/RAVELING	L	740 SF

Sample # 10 **Area:** 4935 SF

Distress Description	Severity	Quantity
WEATHERING/RAVELING	L	740 SF
LONGITUDINAL/TRANSVERSE CRACKING	L	26 LF
WEATHERING/RAVELING	M	72 SF
LONGITUDINAL/TRANSVERSE CRACKING	H	21 LF
LONGITUDINAL/TRANSVERSE CRACKING	M	8 LF

Sample # 16 **Area:** 4935 SF

Distress Description	Severity	Quantity
WEATHERING/RAVELING	L	740 SF
WEATHERING/RAVELING	M	142 SF
LONGITUDINAL/TRANSVERSE CRACKING	L	3 LF

Sample # 22 **Area:** 5250 SF

Distress Description	Severity	Quantity
WEATHERING/RAVELING	L	780 SF
LONGITUDINAL/TRANSVERSE CRACKING	L	4 LF
LONGITUDINAL/TRANSVERSE CRACKING	M	3 LF
WEATHERING/RAVELING	H	1 SF

Sample # 28 **Area:** 4750 SF

Distress Description	Severity	Quantity
WEATHERING/RAVELING	L	710 SF
LONGITUDINAL/TRANSVERSE CRACKING	M	9 LF
LONGITUDINAL/TRANSVERSE CRACKING	L	4 LF
PATCHING	L	6 SF

Extrapolated Distress Quantities*

Distress Description	Severity	Quantity	Density	Deduct
WEATHERING/RAVELING	L	24147 SF	14.96 %	11.97
LONGITUDINAL/TRANSVERSE CRACKING	H	137 LF	0.08 %	7.50
WEATHERING/RAVELING	M	1393 SF	0.86 %	7.45
WEATHERING/RAVELING	H	7 SF	0.00 %	6.00
LONGITUDINAL/TRANSVERSE CRACKING	M	130 LF	0.08 %	4.00
LONGITUDINAL/TRANSVERSE CRACKING	L	241 LF	0.15 %	2.72
PATCHING	L	39 SF	0.02 %	2.00

* Multiple deduct values are scaled down from their algebraic sum to keep the model consistent with experimental data.

Percent of Deduct Values Based on Distress Mechanism

0.0 **% Load** 100.0 **% Climate/Durability** 0.0 **% Other**

STEVENSVILLE AIRPORT

Branch: 05T **TAXIWAY** **T-4**

Length: 360 LF **Width:** 35 LF **Area:** 12,600 SF **Last Const. :** 2003 **Family:** 9ACRMU

From: NORTHWEST TAXIWAY **To:** OFF A-2 **Surface:** AC

Inspections

Samples Surveyed: 3 **Total Samples:** 3 **Last Inspection Date:** 10/30/2009 **PCI: 94**

Sample # 1 **Area:** 4200 SF

Distress Description	Severity	Quantity
WEATHERING/RAVELING	L	50 SF
DEPRESSION	L	8 SF
OIL SPILLAGE	N	1 SF

Sample # 2 **Area:** 4200 SF

Distress Description	Severity	Quantity
WEATHERING/RAVELING	L	50 SF
OIL SPILLAGE	N	40 SF
DEPRESSION	L	18 SF

Sample # 3 **Area:** 4200 SF

Distress Description	Severity	Quantity
WEATHERING/RAVELING	L	50 SF

Extrapolated Distress Quantities*

Distress Description	Severity	Quantity	Density	Deduct
WEATHERING/RAVELING	L	150 SF	1.19 %	2.91
OIL SPILLAGE	N	41 SF	0.33 %	2.90
DEPRESSION	L	26 SF	0.21 %	0.83

* Multiple deduct values are scaled down from their algebraic sum to keep the model consistent with experimental data.

Percent of Deduct Values Based on Distress Mechanism

0.0 **% Load** 44.0 **% Climate/Durability** 56.0 **% Other**

STEVENSVILLE AIRPORT

FIRST YEAR LOCAL:2010 LOCAL REPAIR COST: $23,890

Section	Distress Description	Severity	Quantity	Work Description	Quantity	Cost	Policy
A-1	L & T CR	H	3 LF	Crack Sealing - AC	3 LF	$4	PREV.
A-1	L & T CR	M	155 LF	Crack Sealing - AC	155 LF	$232	PREV.
A-1	OIL SPILLAGE	N	68 SF	Patching - AC Shallow	105 SF	$1,561	PREV.
A-1	DEPRESSION	H	79 SF	Patching - AC Deep	119 SF	$4,383	PREV.
A-1	PATCHING	H	82 SF	Patching - AC Deep	123 SF	$4,515	PREV.
A-2	L & T CR	H	856 LF	Crack Sealing - AC	856 LF	$1,283	PREV.
A-2	L & T CR	M	1014 LF	Crack Sealing - AC	1014 LF	$1,521	PREV.
A-2	DEPRESSION	M	38 SF	Patching - AC Deep	67 SF	$2,456	PREV.
A-2	PATCHING	H	38 SF	Patching - AC Deep	67 SF	$2,456	PREV.
R-1	DEPRESSION	H	68 SF	Patching - AC Deep	106 SF	$3,885	PREV.
T-1	L & T CR	H	6 LF	Crack Sealing - AC	6 LF	$8	PREV.
T-1	L & T CR	M	82 LF	Crack Sealing - AC	82 LF	$122	PREV.
T-3	L & T CR	M	131 LF	Crack Sealing - AC	131 LF	$195	PREV.
T-3	L & T CR	H	137 LF	Crack Sealing - AC	137 LF	$205	PREV.
T-4	OIL SPILLAGE	N	41 SF	Patching - AC Shallow	71 SF	$1,062	PREV.

FIFTEEN YEAR PROJECTIONS: ESTIMATED AVERAGE ANNUAL COST: $124,109

PLAN YEAR: 2010 ESTIMATED COST: $426,887

SectionI	Maintenance	Local	Global	Major<Crit	Major>Crit	Total	PCI before	PCI after
A-1	Basic Prev.	$10,696				$10,696	69	69
A-2	Prev. & Thin AC	$7,716	$144,680			$152,397	63	78
R-1	Basic Prev.	$3,885				$3,885	67	67
T-1	Basic Prev.	$130				$130	67	67
T-3	Prev. & Thin AC	$400	$258,317			$258,718	78	89
T-4	Basic Prev.	$1,062				$1,062	93	93

PLAN YEAR: 2011 ESTIMATED COST: $19,262

SectionI	Maintenance	Local	Global	Major<Crit	Major>Crit	Total	PCI before	PCI after
A-1	Basic Prev.	$3,186				$3,186	67	67
A-2	Basic Prev.	$2,636				$2,636	75	75
R-1	Basic Prev.	$11,131				$11,131	64	64
T-1	Basic Prev.	$1,427				$1,427	64	64
T-3	Basic Prev.	$882				$882	87	87

PLAN YEAR: 2012 ESTIMATED COST: $21,469

SectionI	Maintenance	Local	Global	Major<Crit	Major>Crit	Total	PCI before	PCI after
A-1	Basic Prev.	$3,402				$3,402	64	64
A-2	Basic Prev.	$3,292				$3,292	72	72
R-1	Basic Prev.	$11,709				$11,709	62	62
T-1	Basic Prev.	$1,501				$1,501	62	62
T-3	Basic Prev.	$1,510				$1,510	84	84
T-4	Basic Prev.	$55				$55	87	87

PLAN YEAR: 2013 ESTIMATED COST: $43,535

SectionI	Maintenance	Local	Global	Major<Crit	Major>Crit	Total	PCI before	PCI after
A-1	Basic Prev.	$3,583				$3,583	62	62
A-2	Basic Prev.	$3,837				$3,837	69	69
R-1	Basic Prev.	$12,182				$12,182	61	61
T-1	Basic Prev.	$1,561				$1,561	61	61
T-3	Basic Prev.	$2,107				$2,107	82	82
T-4	Prev. & Thin AC	$105	$20,160			$20,265	85	100

PLAN YEAR: 2014 ESTIMATED COST: $24,965

SectionI	Maintenance	Local	Global	Major<Crit	Major>Crit	Total	PCI before	PCI after
A-1	Basic Prev.	$3,730				$3,730	61	61
A-2	Basic Prev.	$4,171				$4,171	66	66
R-1	Basic Prev.	$12,715				$12,715	60	60
T-1	Basic Prev.	$1,630				$1,630	60	60
T-3	Basic Prev.	$2,719				$2,719	80	80

PLAN YEAR: 2015 ESTIMATED COST: $27,055

SectionI	Maintenance	Local	Global	Major<Crit	Major>Crit	Total	PCI before	PCI after
A-1	Basic Prev.	$3,888				$3,888	60	60
A-2	Basic Prev.	$4,503				$4,503	63	63
R-1	Basic Prev.	$13,323				$13,323	59	59
T-1	Basic Prev.	$1,708				$1,708	59	59
T-3	Basic Prev.	$3,633				$3,633	78	78

STEVENSVILLE AIRPORT

PLAN YEAR: 2016 ESTIMATED COST: $29,063

SectionI	Maintenance	Local	Global	Major<Crit	Major>Crit	Total	PCI before	PCI after
A-1	Basic Prev.	$4,079				$4,079	59	59
A-2	Basic Prev.	$4,835				$4,835	61	61
R-1	Basic Prev.	$13,777				$13,777	58	58
T-1	Basic Prev.	$1,766				$1,766	58	58
T-3	Basic Prev.	$4,582				$4,582	75	75
T-4	Basic Prev.	$25				$25	89	89

PLAN YEAR: 2017 ESTIMATED COST: $31,247

SectionI	Maintenance	Local	Global	Major<Crit	Major>Crit	Total	PCI before	PCI after
A-1	Basic Prev.	$4,220				$4,220	58	58
A-2	Basic Prev.	$5,454				$5,454	58	58
R-1	Basic Prev.	$14,116				$14,116	57	57
T-1	Basic Prev.	$1,809				$1,809	57	57
T-3	Basic Prev.	$5,571				$5,571	73	73
T-4	Basic Prev.	$78				$78	86	86

PLAN YEAR: 2018 ESTIMATED COST: $33,461

SectionI	Maintenance	Local	Global	Major<Crit	Major>Crit	Total	PCI before	PCI after
A-1	Basic Prev.	$4,328				$4,328	57	57
A-2	Basic Prev.	$6,185				$6,185	55	55
R-1	Basic Prev.	$14,383				$14,383	57	57
T-1	Basic Prev.	$1,844				$1,844	57	57
T-3	Basic Prev.	$6,597				$6,597	70	70
T-4	Basic Prev.	$126				$126	84	84

PLAN YEAR: 2019 ESTIMATED COST: $35,203

SectionI	Maintenance	Local	Global	Major<Crit	Major>Crit	Total	PCI before	PCI after
A-1	Basic Prev.	$4,410				$4,410	57	57
A-2	Basic Prev.	$6,939				$6,939	52	52
R-1	Basic Prev.	$14,624				$14,624	57	57
T-1	Basic Prev.	$1,874				$1,874	57	57
T-3	Basic Prev.	$7,183				$7,183	68	68
T-4	Basic Prev.	$173				$173	82	82

PLAN YEAR: 2020 ESTIMATED COST: $477,890

SectionI	Maintenance	Local	Global	Major<Crit	Major>Crit	Total	PCI before	PCI after
A-1	Basic Prev.	$4,484				$4,484	57	57
A-2	Reconstruct			$190,308		$190,308	49	100
R-1	Basic Prev.	$14,899				$14,899	56	56
T-1	Basic Prev.	$1,910				$1,910	56	56
T-3	Prev. & Thin AC	$7,747	$258,317			$266,064	65	78
T-4	Basic Prev.	$224				$224	79	79

PLAN YEAR: 2021 ESTIMATED COST: $26,670

SectionI	Maintenance	Local	Global	Major<Crit	Major>Crit	Total	PCI before	PCI after
A-1	Basic Prev.	$4,567				$4,567	56	56
R-1	Basic Prev.	$15,268				$15,268	56	56
T-1	Basic Prev.	$1,957				$1,957	56	56
T-3	Basic Prev.	$4,582				$4,582	75	75
T-4	Basic Prev.	$296				$296	77	77

PLAN YEAR: 2022 ESTIMATED COST: $496,988

SectionI	Maintenance	Local	Global	Major<Crit	Major>Crit	Total	PCI before	PCI after
A-1	Basic Prev.	$4,676				$4,676	56	56
R-1	Reconstruct			$431,111		$431,111	55	100
T-1	Reconstruct			$55,260		$55,260	55	100
T-3	Basic Prev.	$5,571				$5,571	73	73
T-4	Basic Prev.	$371				$371	75	75

PLAN YEAR: 2023 ESTIMATED COST: $159,704

SectionI	Maintenance	Local	Global	Major<Crit	Major>Crit	Total	PCI before	PCI after
A-1	Reconstruct			$132,156		$132,156	55	100
A-2	Basic Prev.	$343				$343	88	88
T-3	Basic Prev.	$6,597				$6,597	70	70
T-4	Prev. & Thin AC	$448	$20,160			$20,608	72	84

PLAN YEAR: 2024 ESTIMATED COST: $8,233

SectionI	Maintenance	Local	Global	Major<Crit	Major>Crit	Total	PCI before	PCI after
A-2	Basic Prev.	$878				$878	84	84
T-3	Basic Prev.	$7,183				$7,183	68	68
T-4	Basic Prev.	$173				$173	82	82

STEVENSVILLE AIRPORT

10/30/2009

A-1, surface detail with tiedown

A-1, overview

A-2, surface detail

A-2, surface detail with crack

STEVENSVILLE AIRPORT

10/30/2009

T-1, surface detail

T-1, surface detail

T-3, surface detail

T-3, overview

STEVENSVILLE AIRPORT

10/30/2009

T-4, overview with oil spill

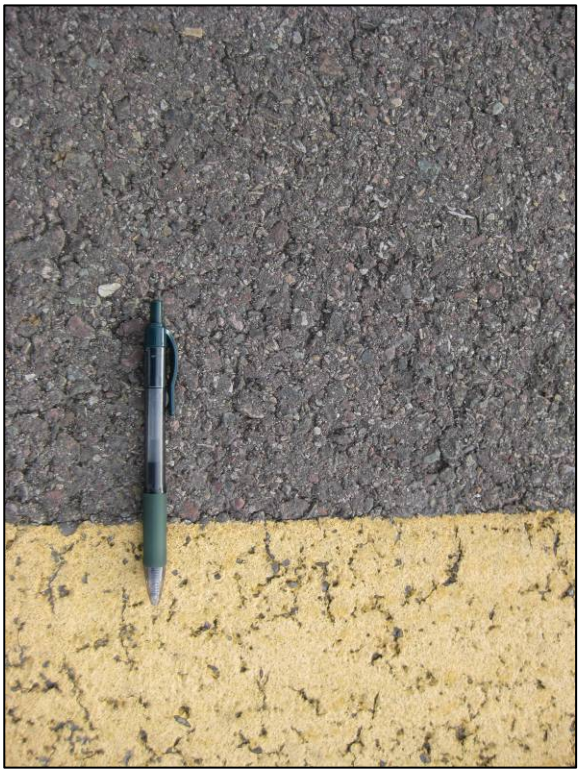

T-4, surface detail

R-1, surface detail, porous friction coarse

R-1, surface detail with bleeding

STEVENSVILLE

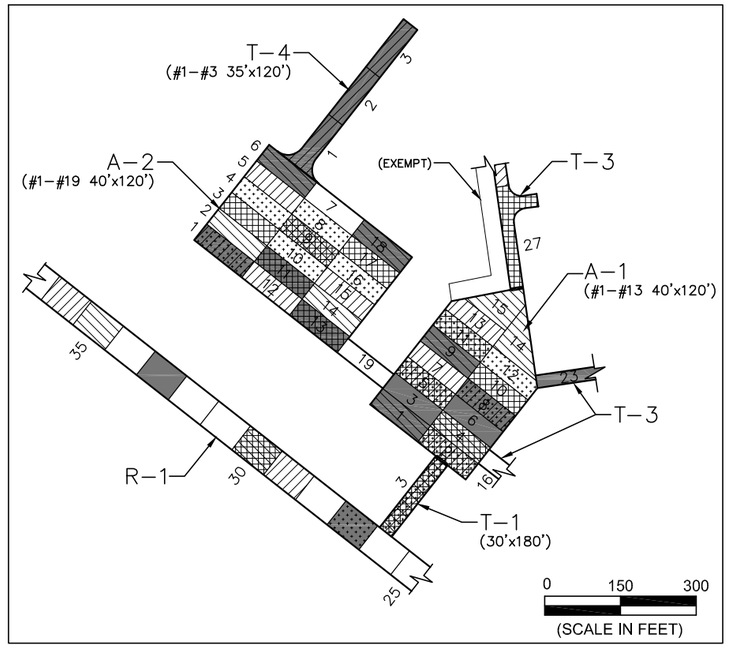

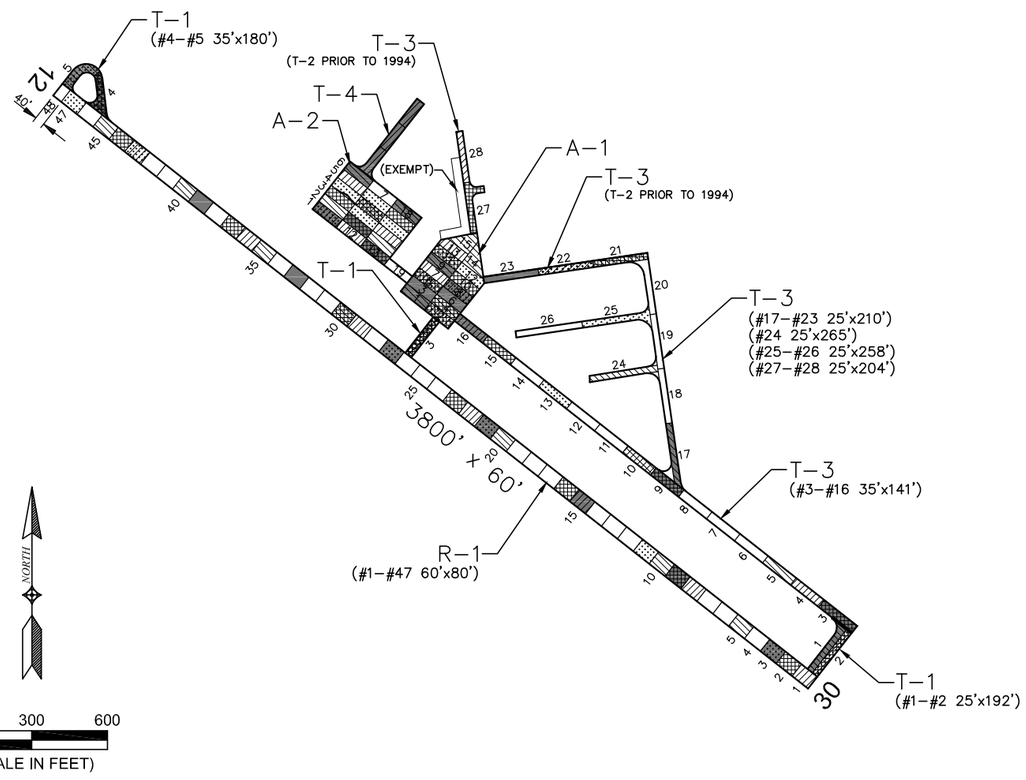

PAVEMENT STRENGTH SURVEY/PAVEMENT CONDITION SURVEY

PAVE. IDENT.	SOIL CLASS	SUB GRADE CLASS	SUBBASE COURSE	BASE COURSE	SURFACE COURSE	OVERLAY	PAVEMENT STRENGTH MAX. GROSS LOAD (LBS) SINGLE	DUAL	DUAL TAN.	REMARKS
RUNWAYS										
R–1		CBR=7.6		5.5" P–208	1.8" P–609	1" P–402	12,500			3
TAXIWAYS										
T–1		CBR=7.6		5.5" P–208	1.8" P–609	1" P–402	12,500			3
T–3			6" COMP.	6" P–208	2" P–401R		12,500			4
T–4			12" P–154	4" P–208	3" TYPE S–3		12,500			5
APRONS										
A–1		CBR=7.6		5.5" P–208	1.8" P–609	1" P–402	12,500			3
A–2			6" COMP.	6" P–208	2" P–401R					4

REMARKS:

1. ADAP–03, 1981, ORIGINAL CONSTRUCTION
2. SUBGRADE = CEMENTED SILTY GRAVEL AND HARD PAN.
3. AIP–01, OVERLAY RUNWAY, APRON, AND TAXIWAY.
4. AIP–02, 1994, CONSTRUCT PARTIAL PARALLEL TAXIWAY FOR RUNWAY 12–30, CONSTRUCT ACCESS TAXIWAY (T–3), AND EXPAND APRON (A–2).
5. AIP–004, 2003, CONSTRUCT TAXIWAY (T–4); CRACK SEAL, FOG SEAL, AND REMARK REMAINING PAVEMENTS.

LEGEND

- 1997 SURVEY AREA
- 2000 SURVEY AREA
- 2003 SURVEY AREA
- 2006 SURVEY AREA
- 2009 SURVEY AREA

DATE OF PAVEMENT STRENGTH SURVEY:	
EVALUATED BY:	
DATE OF MOST RECENT PAVEMENT CONDITION SURVEY:	OCT. 30, 2009
EVALUATED BY:	R. DONALDSON

MONTANA AVIATION SYSTEM PLAN
2009 UPDATE - PAVEMENT CONDITION INDEXES

STEVENSVILLE AIRPORT

PREPARED FOR: MONTANA AERONAUTICS DIVISION

STEVENSVILLE
MONTANA

DATE: NOV. 2009

PREPARED BY: RPA

STEVENSVILLE