EKALAKA AIRPORT

Branch: 57A **APRON** **A-1**

Length: 500 LF **Width:** 200 LF **Area:** 100,000 SF **Last Const. :** 2004 **Family:** 9ACAM
From: ENTIRE APRON **To:** **Surface:** AC

Inspections

Samples Surveyed: 5 **Total Samples:** 21 **Last Inspection Date:** 7/16/2009 **PCI: 86**

Sample # 1 **Area:** 5000 SF

Distress Description	Severity	Quantity
WEATHERING/RAVELING	L	360 SF
DEPRESSION	L	25 SF
OIL SPILLAGE	N	10 SF
WEATHERING/RAVELING	H	1 SF

Sample # 10 **Area:** 5000 SF

Distress Description	Severity	Quantity
WEATHERING/RAVELING	L	350 SF
LONGITUDINAL/TRANSVERSE CRACKING	L	22 LF
PATCHING	L	1 SF
DEPRESSION	L	1 SF

Sample # 11 **Area:** 5000 SF

Distress Description	Severity	Quantity
WEATHERING/RAVELING	L	350 SF
DEPRESSION	L	4 SF
OIL SPILLAGE	N	2 SF
DEPRESSION	L	1 SF
WEATHERING/RAVELING	M	1 SF
PATCHING	M	1 SF

Sample # 18 **Area:** 5000 SF

Distress Description	Severity	Quantity
WEATHERING/RAVELING	L	315 SF
DEPRESSION	L	5 SF
OIL SPILLAGE	N	3 SF
BLEEDING	N	1 SF

Sample # 20 **Area:** 5000 SF

Distress Description	Severity	Quantity
WEATHERING/RAVELING	L	145 SF
DEPRESSION	L	4 SF
OIL SPILLAGE	N	4 SF

Extrapolated Distress Quantities*

Distress Description	Severity	Quantity	Density	Deduct
WEATHERING/RAVELING	L	6080 SF	6.08 %	7.57
PATCHING	M	4 SF	0.00 %	6.20
WEATHERING/RAVELING	H	4 SF	0.00 %	6.00
WEATHERING/RAVELING	M	4 SF	0.00 %	4.00
LONGITUDINAL/TRANSVERSE CRACKING	L	88 LF	0.09 %	2.50
OIL SPILLAGE	N	76 SF	0.08 %	2.00
PATCHING	L	4 SF	0.00 %	2.00
DEPRESSION	L	160 SF	0.16 %	0.49
BLEEDING	N	4 SF	0.00 %	0.00

* Multiple deduct values are scaled down from their algebraic sum to keep the model consistent with experimental data.

Percent of Deduct Values Based on Distress Mechanism

0.0 **% Load** 92.0 **% Climate/Durability** 8.0 **% Other**

EKALAKA AIRPORT

Branch: 57R **RUNWAY** **R-1**

Length: 3,322 LF **Width:** 75 LF **Area:** 249,150 SF **Last Const. :** 2004 **Family:** 9ACRML
From: STA 0+00 RWY 13/31 **To:** STA 38+00 RWY 13/31 **Surface:** AC

Inspections

Samples Surveyed: 7 **Total Samples:** 51 **Last Inspection Date:** 7/16/2009 **PCI: 83**

Sample # 4 **Area:** 4875 SF

Distress Description	Severity	Quantity
WEATHERING/RAVELING	L	331 SF
WEATHERING/RAVELING	M	49 SF

Sample # 11 **Area:** 4875 SF

Distress Description	Severity	Quantity
WEATHERING/RAVELING	L	331 SF
LONGITUDINAL/TRANSVERSE CRACKING	L	27 LF
WEATHERING/RAVELING	M	49 SF

Sample # 18 **Area:** 4875 SF

Distress Description	Severity	Quantity
WEATHERING/RAVELING	L	331 SF
WEATHERING/RAVELING	M	48 SF
WEATHERING/RAVELING	H	1 SF

Sample # 25 **Area:** 4875 SF

Distress Description	Severity	Quantity
WEATHERING/RAVELING	L	331 SF
LONGITUDINAL/TRANSVERSE CRACKING	L	89 LF
LONGITUDINAL/TRANSVERSE CRACKING	M	28 LF
WEATHERING/RAVELING	M	48 SF

Sample # 32 **Area:** 4875 SF

Distress Description	Severity	Quantity
WEATHERING/RAVELING	L	331 SF
LONGITUDINAL/TRANSVERSE CRACKING	L	58 LF
WEATHERING/RAVELING	M	48 SF

Sample # 39 **Area:** 4875 SF

Distress Description	Severity	Quantity
WEATHERING/RAVELING	L	331 SF
WEATHERING/RAVELING	M	48 SF
LONGITUDINAL/TRANSVERSE CRACKING	L	10 LF

Sample # 46 **Area:** 4875 SF

Distress Description	Severity	Quantity
WEATHERING/RAVELING	L	331 SF
WEATHERING/RAVELING	M	49 SF

Extrapolated Distress Quantities*

Distress Description	Severity	Quantity	Density	Deduct
WEATHERING/RAVELING	L	16917 SF	6.79 %	8.04
WEATHERING/RAVELING	M	2475 SF	0.99 %	7.86
WEATHERING/RAVELING	H	7 SF	0.00 %	6.00
LONGITUDINAL/TRANSVERSE CRACKING	L	1344 LF	0.54 %	4.13
LONGITUDINAL/TRANSVERSE CRACKING	M	204 LF	0.08 %	4.00

* Multiple deduct values are scaled down from their algebraic sum to keep the model consistent with experimental data.

Percent of Deduct Values Based on Distress Mechanism

0.0 **% Load** 100.0 **% Climate/Durability** 0.0 **% Other**

EKALAKA AIRPORT

Branch: 57R **RUNWAY** **R-11**

Length: 478 LF **Width:** 75 LF **Area:** 35,850 SF **Last Const. :** 2004 **Family:** 9ACRML
From: R-1 **To:** T-11 **Surface:** AC

Inspections

Samples Surveyed: 4 **Total Samples:** 7 **Last Inspection Date:** 7/16/2009 **PCI: 79**

Sample # 2 **Area:** 4875 SF

Distress Description	Severity	Quantity
WEATHERING/RAVELING	L	331 SF
LONGITUDINAL/TRANSVERSE CRACKING	L	43 LF
WEATHERING/RAVELING	M	48 SF

Sample # 4 **Area:** 4875 SF

Distress Description	Severity	Quantity
WEATHERING/RAVELING	L	331 SF
WEATHERING/RAVELING	M	147 SF
WEATHERING/RAVELING	H	6 SF

Sample # 6 **Area:** 4875 SF

Distress Description	Severity	Quantity
WEATHERING/RAVELING	L	331 SF
WEATHERING/RAVELING	M	147 SF

Sample # 7 **Area:** 4875 SF

Distress Description	Severity	Quantity
WEATHERING/RAVELING	L	331 SF
LONGITUDINAL/TRANSVERSE CRACKING	L	55 LF
WEATHERING/RAVELING	M	96 SF
WEATHERING/RAVELING	H	4 SF
OIL SPILLAGE	N	1 SF

Extrapolated Distress Quantities*

Distress Description	Severity	Quantity	Density	Deduct
WEATHERING/RAVELING	M	805 SF	2.25 %	10.85
WEATHERING/RAVELING	L	2434 SF	6.79 %	8.04
WEATHERING/RAVELING	H	18 SF	0.05 %	6.00
LONGITUDINAL/TRANSVERSE CRACKING	L	180 LF	0.50 %	4.07
OIL SPILLAGE	N	2 SF	0.01 %	2.00

* Multiple deduct values are scaled down from their algebraic sum to keep the model consistent with experimental data.

Percent of Deduct Values Based on Distress Mechanism

0.0 **% Load** 94.0 **% Climate/Durability** 6.0 **% Other**

EKALAKA AIRPORT

Branch: 57T **TAXIWAY** **T-1**

Length: 2,100 LF **Width:** 35 LF **Area:** 73,500 SF **Last Const. :** 2004 **Family:** 9ACRML
From: APRON and HANGARS **To:** RWY 13/31 **Surface:** AC

Inspections

Samples Surveyed: 4 **Total Samples:** 11 **Last Inspection Date:** 7/16/2009 **PCI: 85**

Sample # 6 **Area:** 3745 SF

Distress Description	Severity	Quantity
WEATHERING/RAVELING	L	260 SF
WEATHERING/RAVELING	M	6 SF

Sample # 7 **Area:** 3745 SF

Distress Description	Severity	Quantity
WEATHERING/RAVELING	L	260 SF
WEATHERING/RAVELING	M	12 SF
OIL SPILLAGE	N	4 SF

Sample # 11 **Area:** 4410 SF

Distress Description	Severity	Quantity
WEATHERING/RAVELING	L	340 SF
LONGITUDINAL/TRANSVERSE CRACKING	L	29 LF
WEATHERING/RAVELING	M	22 SF

Sample # 12 **Area:** 4410 SF

Distress Description	Severity	Quantity
WEATHERING/RAVELING	L	340 SF
WEATHERING/RAVELING	M	7 SF

Extrapolated Distress Quantities*

Distress Description	Severity	Quantity	Density	Deduct
WEATHERING/RAVELING	L	5408 SF	7.36 %	8.39
WEATHERING/RAVELING	M	212 SF	0.29 %	5.16
LONGITUDINAL/TRANSVERSE CRACKING	L	131 LF	0.18 %	2.95
OIL SPILLAGE	N	18 SF	0.02 %	2.00

* Multiple deduct values are scaled down from their algebraic sum to keep the model consistent with experimental data.

Percent of Deduct Values Based on Distress Mechanism

0.0 **% Load** 89.0 **% Climate/Durability** 11.0 **% Other**

EKALAKA AIRPORT

Branch: 57T **TAXIWAY** **T-11**

Length: 214 LF **Width:** 80 LF **Area:** 29,556 SF **Last Const. :** 2004 **Family:** 9ACRML

From: T-1 **To:** HANGARS **Surface:** AC

Inspections

Samples Surveyed: 3 **Total Samples:** 5 **Last Inspection Date:** 7/16/2009 **PCI: 80**

Sample # 2 **Area:** 5680 SF

Distress Description	Severity	Quantity
WEATHERING/RAVELING	L	397 SF
WEATHERING/RAVELING	M	112 SF
LONGITUDINAL/TRANSVERSE CRACKING	L	30 LF
WEATHERING/RAVELING	H	12 SF
PATCHING	M	1 SF

Sample # 3 **Area:** 5680 SF

Distress Description	Severity	Quantity
WEATHERING/RAVELING	L	420 SF
WEATHERING/RAVELING	M	11 SF
OIL SPILLAGE	N	5 SF

Sample # 4 **Area:** 4800 SF

Distress Description	Severity	Quantity
WEATHERING/RAVELING	L	397 SF
WEATHERING/RAVELING	M	28 SF

Extrapolated Distress Quantities*

Distress Description	Severity	Quantity	Density	Deduct
WEATHERING/RAVELING	L	2220 SF	7.51 %	8.48
WEATHERING/RAVELING	M	276 SF	0.93 %	7.68
PATCHING	M	2 SF	0.01 %	6.20
WEATHERING/RAVELING	H	22 SF	0.07 %	6.00
LONGITUDINAL/TRANSVERSE CRACKING	L	55 LF	0.19 %	3.00
OIL SPILLAGE	N	9 SF	0.03 %	2.00

* Multiple deduct values are scaled down from their algebraic sum to keep the model consistent with experimental data.

Percent of Deduct Values Based on Distress Mechanism

0.0 **% Load** 94.0 **% Climate/Durability** 6.0 **% Other**

EKALAKA AIRPORT

FIRST YEAR LOCAL:2010 LOCAL REPAIR COST: $4,180

Section	Distress Description	Severity	Quantity	Work Description	Quantity	Cost	Policy
A-1	PATCHING	M	4 SF	Patching - AC Deep	17 SF	$594	PREV.
A-1	OIL SPILLAGE	N	76 SF	Patching - AC Shallow	116 SF	$1,726	PREV.
R-1	L & T CR	M	205 LF	Crack Sealing - AC	205 LF	$307	PREV.
R-11	OIL SPILLAGE	N	2 SF	Patching - AC Shallow	12 SF	$169	PREV.
T-1	OIL SPILLAGE	N	19 SF	Patching - AC Shallow	40 SF	$587	PREV.
T-11	OIL SPILLAGE	N	10 SF	Patching - AC Shallow	26 SF	$380	PREV.
T-11	PATCHING	M	2 SF	Patching - AC Deep	12 SF	$417	PREV.

FIFTEEN YEAR PROJECTIONS: ESTIMATED AVERAGE ANNUAL COST: $112,590

PLAN YEAR: 2010 ESTIMATED COST: $4,180

SectionI	Maintenance	Local	Global	Major<Crit	Major>Crit	Total	PCI before	PCI after
A-1	Basic Prev.	$2,320				$2,320	84	84
R-1	Basic Prev.	$307				$307	82	82
R-11	Basic Prev.	$169				$169	78	78
T-1	Basic Prev.	$587				$587	83	83
T-11	Basic Prev.	$797				$797	79	79

PLAN YEAR: 2011 ESTIMATED COST: $9,365

SectionI	Maintenance	Local	Global	Major<Crit	Major>Crit	Total	PCI before	PCI after
A-1	Basic Prev.	$1,495				$1,495	81	81
R-1	Basic Prev.	$4,930				$4,930	79	79
R-11	Basic Prev.	$1,005				$1,005	75	75
T-1	Basic Prev.	$1,168				$1,168	80	80
T-11	Basic Prev.	$768				$768	76	76

PLAN YEAR: 2012 ESTIMATED COST: $12,448

SectionI	Maintenance	Local	Global	Major<Crit	Major>Crit	Total	PCI before	PCI after
A-1	Basic Prev.	$2,208				$2,208	78	78
R-1	Basic Prev.	$6,481				$6,481	76	76
R-11	Basic Prev.	$1,190				$1,190	73	73
T-1	Basic Prev.	$1,639				$1,639	78	78
T-11	Basic Prev.	$929				$929	74	74

PLAN YEAR: 2013 ESTIMATED COST: $15,302

SectionI	Maintenance	Local	Global	Major<Crit	Major>Crit	Total	PCI before	PCI after
A-1	Basic Prev.	$2,966				$2,966	75	75
R-1	Basic Prev.	$7,840				$7,840	74	74
R-11	Basic Prev.	$1,351				$1,351	71	71
T-1	Basic Prev.	$2,076				$2,076	75	75
T-11	Basic Prev.	$1,069				$1,069	72	72

PLAN YEAR: 2014 ESTIMATED COST: $638,721

SectionI	Maintenance	Local	Global	Major<Crit	Major>Crit	Total	PCI before	PCI after
A-1	Basic Prev.	$3,693				$3,693	72	72
R-1	Prev. & Thin AC	$9,009	$398,641			$407,650	72	85
R-11	Prev. & Thin AC	$1,485	$57,360			$58,845	70	80
T-1	Prev. & Thin AC	$2,453	$117,600			$120,053	73	87
T-11	Prev. & Thin AC	$1,190	$47,290			$48,480	70	82

PLAN YEAR: 2015 ESTIMATED COST: $9,921

SectionI	Maintenance	Local	Global	Major<Crit	Major>Crit	Total	PCI before	PCI after
A-1	Basic Prev.	$4,268				$4,268	69	69
R-1	Basic Prev.	$3,481				$3,481	82	82
R-11	Basic Prev.	$792				$792	78	78
T-1	Basic Prev.	$797				$797	83	83
T-11	Basic Prev.	$583				$583	79	79

PLAN YEAR: 2016 ESTIMATED COST: $12,508

SectionI	Maintenance	Local	Global	Major<Crit	Major>Crit	Total	PCI before	PCI after
A-1	Basic Prev.	$4,638				$4,638	66	66
R-1	Basic Prev.	$4,930				$4,930	79	79
R-11	Basic Prev.	$1,005				$1,005	75	75
T-1	Basic Prev.	$1,168				$1,168	80	80
T-11	Basic Prev.	$768				$768	76	76

EKALAKA AIRPORT

PLAN YEAR: 2017 ESTIMATED COST: $15,255

SectionI	Maintenance	Local	Global	Major<Crit	Major>Crit	Total	PCI before	PCI after
A-1	Basic Prev.	$5,007				$5,007	63	63
R-1	Basic Prev.	$6,488				$6,488	76	76
R-11	Basic Prev.	$1,190				$1,190	73	73
T-1	Basic Prev.	$1,642				$1,642	78	78
T-11	Basic Prev.	$929				$929	74	74

PLAN YEAR: 2018 ESTIMATED COST: $17,709

SectionI	Maintenance	Local	Global	Major<Crit	Major>Crit	Total	PCI before	PCI after
A-1	Basic Prev.	$5,374				$5,374	61	61
R-1	Basic Prev.	$7,840				$7,840	74	74
R-11	Basic Prev.	$1,351				$1,351	71	71
T-1	Basic Prev.	$2,076				$2,076	75	75
T-11	Basic Prev.	$1,069				$1,069	72	72

PLAN YEAR: 2019 ESTIMATED COST: $20,224

SectionI	Maintenance	Local	Global	Major<Crit	Major>Crit	Total	PCI before	PCI after
A-1	Basic Prev.	$6,087				$6,087	58	58
R-1	Basic Prev.	$9,009				$9,009	72	72
R-11	Basic Prev.	$1,485				$1,485	70	70
T-1	Basic Prev.	$2,453				$2,453	73	73
T-11	Basic Prev.	$1,190				$1,190	70	70

PLAN YEAR: 2020 ESTIMATED COST: $22,525

SectionI	Maintenance	Local	Global	Major<Crit	Major>Crit	Total	PCI before	PCI after
A-1	Basic Prev.	$6,892				$6,892	55	55
R-1	Basic Prev.	$10,039				$10,039	70	70
R-11	Basic Prev.	$1,552				$1,552	68	68
T-1	Basic Prev.	$2,781				$2,781	71	71
T-11	Basic Prev.	$1,260				$1,260	69	69

PLAN YEAR: 2021 ESTIMATED COST: $24,339

SectionI	Maintenance	Local	Global	Major<Crit	Major>Crit	Total	PCI before	PCI after
A-1	Basic Prev.	$7,732				$7,732	52	52
R-1	Basic Prev.	$10,627				$10,627	69	69
R-11	Basic Prev.	$1,616				$1,616	67	67
T-1	Basic Prev.	$3,051				$3,051	70	70
T-11	Basic Prev.	$1,314				$1,314	68	68

PLAN YEAR: 2022 ESTIMATED COST: $228,713

SectionI	Maintenance	Local	Global	Major<Crit	Major>Crit	Total	PCI before	PCI after
A-1	Reconstruct			$211,407		$211,407	49	100
R-1	Basic Prev.	$11,073				$11,073	68	68
R-11	Basic Prev.	$1,680				$1,680	66	66
T-1	Basic Prev.	$3,187				$3,187	68	68
T-11	Basic Prev.	$1,366				$1,366	66	66

PLAN YEAR: 2023 ESTIMATED COST: $18,002

SectionI	Maintenance	Local	Global	Major<Crit	Major>Crit	Total	PCI before	PCI after
R-1	Basic Prev.	$11,516				$11,516	66	66
R-11	Basic Prev.	$1,749				$1,749	64	64
T-1	Basic Prev.	$3,317				$3,317	67	67
T-11	Basic Prev.	$1,421				$1,421	65	65

PLAN YEAR: 2024 ESTIMATED COST: $639,631

SectionI	Maintenance	Local	Global	Major<Crit	Major>Crit	Total	PCI before	PCI after
R-1	Prev. & Thin AC	$11,978	$398,641			$410,619	65	72
R-11	Prev. & Thin AC	$1,830	$57,360			$59,190	63	70
T-1	Prev. & Thin AC	$3,448	$117,600			$121,049	66	73
T-11	Prev. & Thin AC	$1,483	$47,290			$48,773	63	70

EKALAKA AIRPORT

7/16/2009

A-1, spill stains

T-11, surface detail with patch

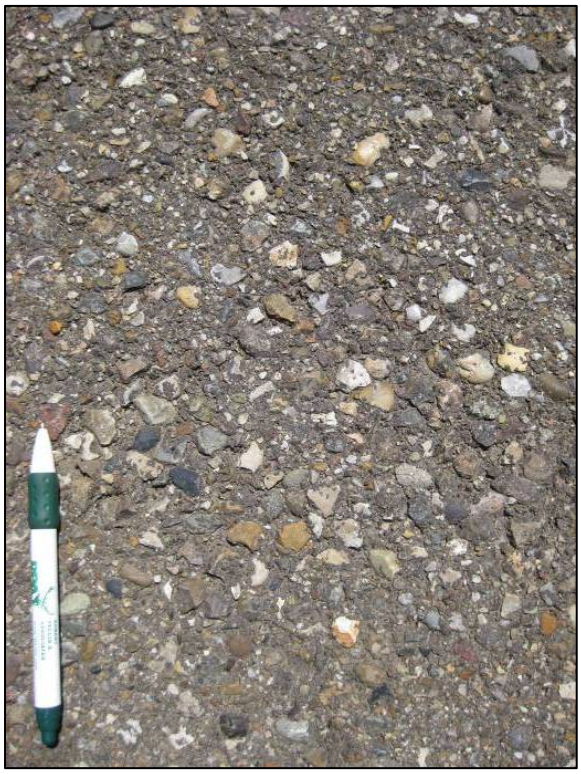

T-1, surface detail

T-1, overview

EKALAKA AIRPORT

7/16/2009

R-1, overview

R-1, surface detail with void

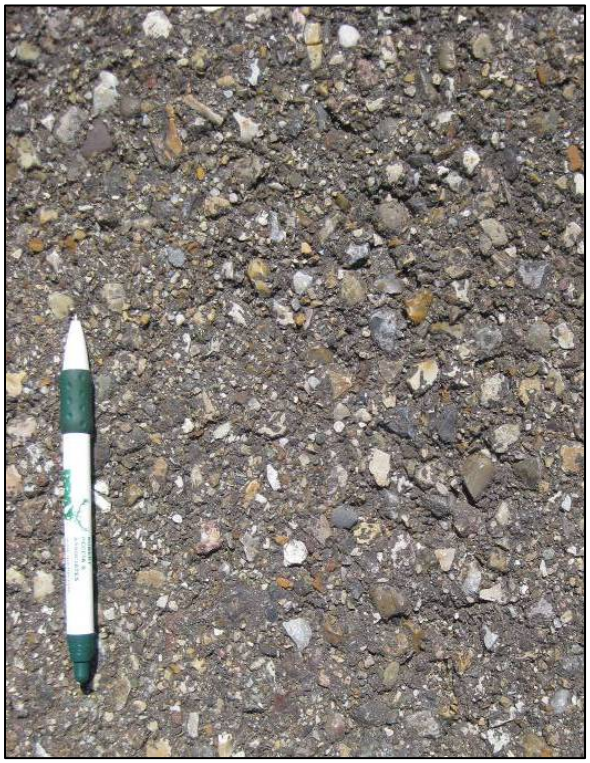

R-11, surface detail with voids

R-11, overview

EKALAKA

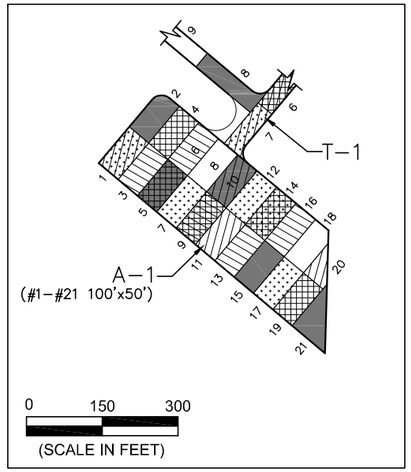

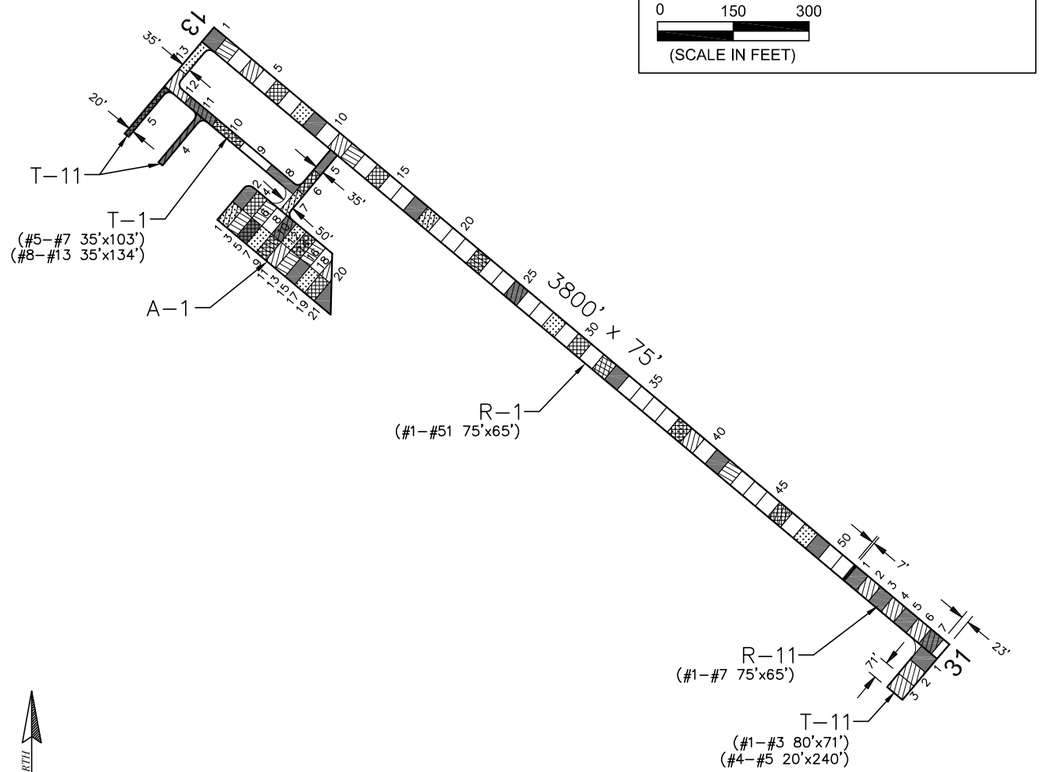

PAVEMENT STRENGTH SURVEY/PAVEMENT CONDITION SURVEY

EKALAKA

PAVE. IDENT.	SOIL CLASS	SUB GRADE CLASS	SUBBASE COURSE	BASE COURSE	SURFACE COURSE	OVERLAY	PAVEMENT STRENGTH MAX. GROSS LOAD (LBS) SINGLE	DUAL	DUAL TAN.	REMARKS
RUNWAYS										
R–1			11.5" P–154		1.5"BIT.P–609	3.5" P–401	12,500			1 2
R–11	CBR=4.5		GEOGRID, FABRIC	12" P–207	4" P–401		12,500			2
TAXIWAYS										
T–1			11.5" P–154		1.5"BIT.P–609	3.5" P–401	12,500			1 2
T–11	CBR=4.5		GEOGRID, FABRIC	10" P–207	4" P–401		12,500			2
APRONS										
A–1			11.5" P–154		1.5"BIT.P–609	3.5" P–401	12,500			1 2

REMARKS:

1. AIP–02, 1992, ALL NEW PAVEMENT.
2. AIP–003, 2004, RECONSTRUCT R–11 AND T–11; 3½" OVERLAY OF ALL REMAINING PAVEMENTS.

LEGEND

- 1997 SURVEY AREA
- 2000 SURVEY AREA
- 2003 SURVEY AREA
- 2006 SURVEY AREA
- 2009 SURVEY AREA

DATE OF PAVEMENT STRENGTH SURVEY:	
EVALUATED BY:	
DATE OF MOST RECENT PAVEMENT CONDITION SURVEY:	JULY 16, 2009
EVALUATED BY:	B. BURKLAND

MONTANA AVIATION SYSTEM PLAN
2009 UPDATE - PAVEMENT CONDITION INDEXES

EKALAKA AIRPORT

PREPARED FOR: MONTANA AERONAUTICS DIVISION

EKALAKA
MONTANA

DATE: NOV. 2009

PREPARED BY: RPA